Roson Dental Unit

Operating Instructions KLT-6210、KLT-6220

User Manual

For Dental Unit KLT-6210, KLT-6220

CE 0598

FOSHAN ROSON MEDICAL INSTRUMENTS CO., LTD

Contents

1. Overview 4
   1.1. Dear Customer 4
   1.2. Service 4
   1.3. Notes for the Operating Instructions 4
   1.4. Other valid documents 5
   1.5. Statement of Absence of Nanomaterials 5
   1.6. Intended purpose 5
   1.7. Intended Patient Population 6
   1.8. Medical Indications 6
   1.9. Contraindications 6
   1.10. Intended Clinical Benefit 6
   1.11. Side-effect 6
   1.12. Residual Risks 6
   1.13. User Profile 7
   1.14. Recommended Compatible Devices 7
   1.15. Expected Service Life 7
2. Safety information 8
   2.1. Hazard Symbols & Corresponding Safety Instructions 8
   2.2. Information on the unit 8
   2.3. On-site installation 8
   2.4. Medium Quality (Water and Air Supply Requirements) 8
   2.5. Maintenance 9
   2.6. Trouble-free operation 9
   2.7. Patient chair Safety 9
   2.8. Ventilation slots 9
   2.9. Non-continuous operation 9
   2.10. Care and cleaning agents 10
   2.11. Modifications and extensions of the unit 10
   2.12. Electromagnetic compatibility 10
   2.13. Dismantling/Installation 10
3. Product description 10
   3.1. Applicable Standards & Compliance Declaration 10
   3.2. Technical parameters 11
   3.3. Suction Performance Parameters 13
   3.4. Handpiece Air & Water Supply Parameters 13
   3.5. Dental unit overview 13
4. Installation and debugging 15
   4.1. Product list 15
   4.2. Installation condition 15
   4.3. Installation Preparation 16
   4.4. Installation Steps 17
   4.5. Debugging 19
5. Operation 19
   5.1. Starting up the dental unit 19
   5.2. Foot control 19
   5.3. Patient chair 20
   5.4. Dentist element 24
   5.5. Assistant Console 29
   5.6. Water Treatment Unit 31
   5.7. Operating light 32
6. Cleaning & Maintenance 33
   6.1. 3-way syringe Reprocessing Requirements 34
   6.2. Waterline Disinfection & Biofilm Control 35
   6.3. Dental Unit Surface Cleaning & Disinfection 36
7. Maintenance by the service engineer 38
   7.1. Inspection & Maintenance Items 38
   7.2. Safety checks 38
8. Troubleshooting 39
9. Disposal 40
10. Overview of graphic symbols 40

10.1. Water/Air Inlet & Control Panel Marking 41
11. Electrical schematic diagrams 42
12. Water-air layouts diagrams 43
13. EMC Guidance 44
14. Accessory 46
15. Serious Incident Reporting 46
16. E-labelling Declaration 46

1. Overview

The KLT-6220/KLT-6210 dental treatment unit is a high-end dental equipment with comprehensive treatment functions developed by our company. The overall design of this device adopts the industry-leading innovative technology and fully integrates the principles of ergonomics. It is equipped with an arc-shaped rotatable saliva collector, which significantly enhances the convenience for patients. The main box shell can be conveniently opened for daily maintenance and inspection, and it is also equipped with an internal water purification system to ensure water safety and hygiene. The dental chair is equipped with a seat cushion and backrest linkage control system, providing patients with a more comfortable and safe experience. The power system is precisely controlled by a DC motor, ensuring smooth operation and no noise interference during the lifting and back adjustment of the dental chair. In addition, the head support pillow adopts a swing design, effectively simplifying the operation process and reducing the workload of medical staff.

1.1. Dear Customer

We are deeply honored to learn that your clinic has chosen our dental treatment chair. The equipment you have selected has won wide recognition in the industry for its simple operation process, innovative ergonomic design and excellent product quality. This operation guide is designed to provide users with comprehensive and systematic guidance, ensuring that users can obtain sufficient support and assistance before their first use and when they need relevant information later. We sincerely hope that this device can effectively improve your diagnosis and treatment efficiency and bring you an outstanding user experience.

1.2. Service

Customer service center

Phone: +86-757-86407037
E-mail: sales001@fsroson.com
Manufacturer: Foshan Roson Medical Instruments Co., Ltd
Add.: No.9 Honghui Mid-Road, Lianne Industrial Zone, Luocun,Shishan Town,Nanhai District, Foshan City, Guangdong Province. P.R. China

EU Authorized Representative: Wellkang Ltd.
Add.:Enterprise Hub, NW Business Complex, 1 Beraghmore Road., Derry, BT48 8SE, Northern. Ireland.
Tel.: +44(20)32876300(ext 1)
Email: AuthRep@CE-marking.eu

1.3. Notes for the Operating Instructions

1.3.1. General Information

- **Observe the Operating Instructions**

Prior to conducting any operation, it is essential to read and become thoroughly acquainted with the operation instructions in this manual to guarantee a comprehensive comprehension of the equipment. Please adhere strictly to the warnings and safety cues enumerated in the manual. It is particularly worth noting that the illustrations in this user manual are based on the KLT-6210 model. The KLT-6220 is an updated version, featuring added convenient operational functions and improvements in the appearance design. Regarding the specific parameters and details of the KLT-6220, please refer to the actual product.

- **Please keep the operation instructions intact.**

The operation instructions should always be placed within easy access so that you or other users can promptly acquire the relevant information when necessary in the future.

- **Help**

If you still encounter problems after carefully reading the operation manual, it is recommended that you contact your dental equipment supplier in a timely manner to obtain further technical support and assistance.

1.3.2. Scope

This document provides a detailed description of the complete version of the unit. Please note that the information included may involve additional components that are beyond the scope of the specific unit you have purchased.

1.4. Other valid documents

- **Maintenance**

The user entity must carry out maintenance work in accordance with the prescribed time schedule to ensure the operational stability and health of patients,users and other relevant personnel.For further information, please refer to the "Maintenance by the Service Engineer" section in Chapter 7.Additionally, the responsibility for implementing all maintenance activities lies with the owner of the equipment. As a manufacturer of medical electrical equipment, our company assumes responsibility for the safety performance of the equipment only under the following circumstances: maintenance and repair work is carried out by our company or an institution officially authorized by our company; and when the equipment malfunctions, original spare parts provided by our company are used for replacement.

- **Exclusion of liability**

If the equipment user fails to fulfill its maintenance obligations or ignores any error prompts, the company hereby explicitly declares that it will not be held responsible for any damage that may result therefrom.

T

- **Notice**

Please contact the manufacturer and local competent authority if you have any serious incident related with the device.

1.5. Statement of Absence of Nanomaterials

This device, along with all its accessories and components, does not contain any nanomaterials, nor are nanomaterials used in the device manufacturing process.

1.6. Intended purpose

The Dental Unit is an AC-powered device that intended to properly position a patient to perform dental procedures and supply power, water, or air to and serve as a base for other dental devices. And the Dental Units are attached to a dental chair.

1.7. Intended Patient Population

Adult patients with a weight not exceeding 150 kg.

1.8. Medical Indications

NA

1.9. Contraindications

1) Patients with body weight over 150 kg;

2) Pediatric patients under 12 years old;

1.10. Intended Clinical Benefit

According to MDR (EU) 2017/745 Article 2(53), a clinical benefit is defined as a positive impact of a device on the health of an individual, which can include a positive impact on patient management.

The Dental Unit is an active, non-invasive device intended to properly position a patient, provide supply power, water, and air to connected dental instruments. The Dental Unit itself does not directly interact with the patient's oral tissues to cure or treat dental diseases (such as caries or periodontal disease); therefore, its clinical benefits are indirect.

The indirect clinical benefits of the Dental Unit are realized through its ability to safely and effectively facilitate and support dental diagnosis and treatment. By meeting its intended technical performances, the device provides patients with stable and comfortable positioning while ensuring dentists maintain an optimal operating field to achieve accurate diagnoses and significantly reduce the risk of iatrogenic injuries. Concurrently, its reliable water and air supply drived the connected dental handpieces and delivers essential cooling for connected dental handpieces to prevent thermal risk.

1.11. Side-effect

The side-effects of Dental Unit are the noise, eye fatigue of the dental doctor by the dental light.

1.12. Residual Risks

Mechanical Overload Hazard: Do not exceed the maximum patient weight capacity of the dental chair, which is strictly limited to 150 kg. Exceeding this weight limit may result in mechanical failure, equipment damage, or severe injury to the patient due to falling.

Pinching and Crushing Hazard: Always ensure that the patient's and operator's hands, feet, limbs, and clothing are clear of all moving parts and mechanical gaps before and during the automated or manual adjustment of the patient chair and backrest to prevent pinching or crushing injuries.

Infection Control and Air Pressure Hazard: To prevent cross-infection and the accumulation of biofilm in the internal waterlines, all water systems must be strictly flushed and disinfected according to the maintenance schedule provided in this manual. Additionally, always verify that the air pressure settings are correct prior to treatment; improper or excessive air pressure may cause tissue damage to the patient.

Potential Side Effects (Operator Fatigue): The clinical use of this dental unit involves continuous operation. The noise generated by the equipment components and prolonged visual exposure to the dental operating light

may cause temporary hearing discomfort or eye fatigue for the operator. Dental professionals are advised to take appropriate breaks during lengthy procedures

1.13. User Profile

- **Installers and Maintenance Personnel**

Installers and maintenance personnel must meet the following requirements:

a. Aged 18 or above, with a college degree or above, or at least three years of experience in installation of CE-marked dental equipment of the same type;
b. Able to understand the English language in this User Manual and displayed on the touchscreen console;
c. Trained by ROSON or fully trained for dental unit installation and maintenance, with experience in installing and maintaining similar medical devices.

- **Intended Users**

The user must meet the following requirements:

a. Licensed dental practitioners and dental assistants with a valid dental practice certificate;
b. Have a college degree or above in stomatology and relevant qualification certificates;
c. Able to read and understand this manual before use, with professional knowledge of stomatology and infection control;
d. Able to understand the English language in this User Manual and displayed on the touchscreen console;
e. Fully trained for the operation of this dental unit, with experience in using similar medical devices.

1.14. Recommended Compatible Devices

Name	Model/specification	Manufacturer
High speed turbine handpiece	HSTH-AIR	Foshan Modern Precision Dental Instruments Co., Ltd
Straight and Geared Angle Handpiece and Dental Air-Motors	MD-4	Foshan Modern Precision Dental Instruments Co., Ltd
Disposable Low-Volume Evacuation (LVE, saliva ejector) tip	Outer diameter: 4.0 mm	General dental consumables manufacturer
Disposable High-Volume Evacuation (HVE) tip	Outer diameter: 5.8 mm	General dental consumables manufacturer
3-way syringe (including nozzle and handle)	XNR-SQ/117*20*30mm	Foshan Roson Medical Instruments Co., Ltd

WARNING: Use of non-recommended, non-CE-marked accessories or components not specified by the manufacturer may lead to degradation of the device's basic safety and essential performance, unacceptable residual risks, and invalidation of the device warranty. The manufacturer shall not be liable for any injury or device damage caused by use of non-approved accessories.

1.15. Expected Service Life

The expected service life of the device is 5 years, calculated from the date of manufacture of the device.

2. Safety information

2.1. Hazard Symbols & Corresponding Safety Instructions

The warning and safety notes in this document must be observed to prevent personal injury and material damage. The warning notes are designated as shown below:

Symbol	Hazard Level	Definition & Corresponding Safety Instructions
	WARNING	Indicates a potentially hazardous situation which, if not avoided, could result in death or serious injury. Safety Instructions: This symbol is marked on the patient chair, instrument hoses and suction system. It indicates the risk of serious injury from abnormal equipment movement, pipeline rupture, or foreign body aspiration. Always confirm that the patient chair movement range is free of obstacles before use, and always hold the suction handle during use to prevent dislodgement and aspiration.
	CAUTION	Indicates a potentially hazardous situation which, if not avoided, may result in minor or moderate injury. Safety Instructions: This symbol is marked on the control panel, operating light and 3-way syringe. It indicates the risk of minor scalds, mucosal irritation or surface corrosion. Do not touch the operating light surface after prolonged use to avoid scalding; do not spray the 3-way syringe towards the eyes or mucous membranes; do not use unapproved disinfectants to prevent surface corrosion.
NOTICE	NOTICE	Indicates a potentially hazardous situation, which, if not avoided, may result in equipment damage.**Safety Instructions**: This symbol is marked on the ventilation slots, water inlet and air inlet. It indicates the risk of equipment damage caused by improper operation. Do not block the ventilation slots; do not connect water source and air source beyond the specified pressure range.

2.2. Information on the unit

The following symbols are located on the unit rating plate, and their definitions are detailed in Chapter 10 "Overview of Graphic Symbols" of this manual  .

2.3. On-site installation

The on-site installation must be performed according to our requirements by ROSON authorized professional engineers. The details are described in Chapter 4 "Installation and Debugging" of this manual.

2.4. Medium Quality (Water and Air Supply Requirements)

Prior to connecting the water supply and compressed air supply lines to the dental unit, an inspection shall be performed to confirm that the on-site water and air sources meet the requirements specified in Chapter 3.2 Technical parameters of this manual.

The water supply and compressed air supply shall fully comply with the technical parameters specified in Chapter 3.2 of this manual.

Only potable water that meets applicable national drinking water and hygiene standards may be used for the unit.

Only dry, oil-free, hygienically clean compressed air shall be used for the unit.

The device owner is fully responsible for the quality of the incoming water. Water quality shall be inspected at least once per month.

For regulatory requirements regarding water quality in your country/region, please contact your authorized ROSON distributor or local dental association.

2.5. Maintenance

- **Authorized technical and spare parts**

For safety, maintenance and repair must be done by ROSON or our authorized agencies. Failed components must be replaced with ROSON original spare parts.

- **Maintenance intervals**

To ensure safe and reliable operation, the equipment owner is solely responsible for ensuring that the unit is inspected at least annually by a service engineer authorized by ROSON. A full safety check is required every 2 years. Contact your supplier for service. Details in Chapter 7.

2.6. Trouble-free operation

The unit may be used only if it functions properly. If trouble-free operation cannot be ensured, take it out of service immediately, have authorized technicians troubleshoot and repair if needed.

2.7. Patient chair Safety

WARNING

- Maximum load: 150 kg in accordance with EN ISO 7494-1:2018. Overloading is prohibited. Do not allow persons weighing over 150 kg to sit on the chair.
- Keep the patient's arms and legs on the upholstery to avoid pinching injuries. Do not place limbs between the upholstery and the base.
- Safety testing performed in accordance with EN 60601-1:2006+A1:2013+A2:2021+A13:2024.

2.8. Ventilation slots

- Never cover ventilation slots – blocked airflow causes overheating and electrical failure.
- Do not spray liquids such as disinfectants into vents – may cause malfunction. Only wipe near vents.

2.9. Non-continuous operation

Chair and backrest motors: Intermittent duty: MAX. 2 min ON / MIN. 18 min OFF. The motors must rest for a minimum of 18 minutes after 2 minutes of continuous use.

2.10. Care and cleaning agents

Unsuitable agents may corrode the unit. Use only ROSON-approved care and cleaning products. Approved cleaning and disinfection agents include: CIDEZYME® XTRA Multi-enzyme detergent, 75% medical alcohol, medical surface disinfectant compliant with EN 14476, 3% hydrogen peroxide solution, chlorine-containing disinfectants with 500 mg/L available chlorine. Detailed usage concentration, contact time and precautions are specified in Chapter 6.

2.11. Modifications and extensions of the unit

- Modifications affecting safety are prohibited by law and MDR.
- For safety, use only ROSON original or expressly approved third-party accessories. User assumes risk for non-approved accessories.

2.12. Electromagnetic compatibility

- Special EMC precautions apply; details in Chapter 13.
- Portable and mobile RF communications equipment may interfere.Use of such equipment within 30 cm of any part of the device, including all cables, accessories and components, is strictly prohibited.

2.13. Dismantling/Installation

Dismantling and reinstallation must be done by ROSON or authorized agencies to ensure function and stability.

3. Product description

3.1. Applicable Standards & Compliance Declaration

The KLT-6210 and KLT-6220 dental treatment units comply with the following harmonized standards (including but not limited to):

- EN 60601-1:2006+A1:2013+A2:2021+A13:2024 Medical electrical equipment - Part 1: General requirements for basic safety and essential performance
- EN 60601-1-2:2015+A1:2021 Medical electrical equipment - Part 1-2: General requirements for basic safety and essential performance - Collateral Standard: Electromagnetic compatibility - Requirements and tests
- EN 60601-1-6:2010+A1:2015 Medical electrical equipment - Part 1-6: General requirements for basic safety and essential performance - Collateral standard: Usability

- EN IEC 80601-2-60:2020 Medical electrical equipment - Part 2-60: Particular requirements for basic safety and essential performance of dental equipment
- EN ISO 7494-1:2018 Dentistry - Operating units - Part 1: Requirements and test methods
- EN ISO 7494-2:2022 Dentistry - Operating units - Part 2: Water supply and air suction systems
- EN ISO 9680:2021 Dentistry - Dental handpieces and motors
- EN ISO 9168:2004 Dentistry - Hose connectors for air and water supply to dental handpieces
- EN ISO 16954:2015 Dentistry - Treatment of water in dental units
- EN ISO 20417:2021 Medical devices - Information to be supplied by the manufacturer
- EN ISO 14971:2019+A11:2021 Medical devices - Application of risk management to medical devices.

Compliance Declaration

The preparation of this manual, and the marking, labelling and safety information provided by the manufacturer, fully comply with the mandatory requirements for manufacturer-supplied information, instructions for use and safety warnings in the following standards:

1) Full clause requirements of EN ISO 20417:2021;
2) Requirements for marking and instructions for use in Chapter 7 and Chapter 10 of EN 60601-1:2006+A1:2013+A2:2021+A13:2024;
3) Requirements for instructions for use and warning marks in Chapter 7 of EN IEC 80601-2-60:2020;
4) All requirements of MDR Annex II, Clause 1.1 for device instructions for use and information supplied by the manufacturer.

This product bears the CE marking in accordance with Regulation (EU) 2017/745 on medical devices (MDR).

3.2. Technical parameters

Category	Item	Details
Basic Information	Model Designation	KLT-6210, KLT-6220
	Expected Service Life	5 years from the date of professional installation and commissioning by a ROSON-authorized engineer (consistent with Chapter 1.16)
	Software Version	V1.0
Power Supply	Maximum Power Consumption	720 VA
	Rated Power Supply	230 VAC, 50/60 Hz
	Rated Current	3.15 A at 230 V
	Fuse Specification	Ø5X20 F6.3AH 250VAC
Protection Class	Protection Class	Class I equipment

Category	Item	Details
	Degree of Protection Against Electric Shock	Type B applied parts
	Ingress Protection (Main Unit)	IPX0
	Ingress Protection (Foot Controller)	IPX4
Transport & Storage Conditions	Temperature	26 ℃ ~ +60 ℃
	Relative Humidity	30 % ~ 85 %
	Barometric Pressure	500 hPa ~ 1060 hPa
Operating Conditions	Ambient Temperature	5 ℃ ~ 40 ℃
	Relative Humidity	30 % ~ 85 %
	Barometric Pressure	540 hPa ~ 1060 hPa
	Maximum Installation Altitude	≤ 3000m
Water Supply	Inlet Water Pressure	0.2 MPa ~ 0.6 MPa
	Minimum Inlet Water Flow	≥5 L/min
	Water Hardness	Less than 2.14 mmol/l (<12 °dH)
	Maximum Inlet Water Temperature	30 ℃
Compressed Air Supply	Inlet Air Pressure	0.55 MPa ~ 0.8 MPa
	Minimum Inlet Air Flow	≥80 Nl/min
Oral Lamp	Illuminance	7000 lux ~ 60000 lux
	Color Temperature	CCT = 4000K ~ 5500K
	Max Load of Light Arm	1.2 kg (KLT-6210); 1.5 kg (KLT-6220)
Patient Chair Parameters	Net Weight	180 kg ± 8 kg (KLT-6210); 230 kg ± 12 kg (KLT-6220)
	Height Adjustment Range	400 mm ~ 750 mm
	Movement Range Deviation	±10mm
	Backrest Movement Range	115° ~ 170° Max.
	Headrest Extension Range	120 mm
	Maximum Load Capacity	150 kg
	Drive Motor Duty Cycle	MAX. 2 min ON / MIN. 18 min OFF

3.3. Suction Performance Parameters

The suction system performance complies with EN ISO 7494-2:2022 standard requirements, and the specific parameters are as follows:

Item	High-Volume Evacuation (HVE)	Low-Volume Evacuation (LVE, Saliva Ejector)
Vacuum Degree	> 25 kPa	> 10 kPa
Water Pumping Rate	> 1000 mL/min	> 400 mL/min
Working Pressure	400 kPa	200 kPa
Filter Pore Size	2 mm	2 mm

3.4. Handpiece Air & Water Supply Parameters

Item	Parameter
Working Air Pressure for High-speed Handpiece	0.25 MPa ~ 0.32 MPa
Working Air Pressure for Low-speed Handpiece	0.3 MPa ~ 0.4 MPa
Working Water Pressure	0.15MPa~0.25MPa
Cooling Water Flow for Handpiece	≥50mL/min at 0.25Mpa
Driving Air Flow for Handpiece	<80NI/min

3.5. Dental unit overview

The dental unit comprises the following main components:



Mark	Component Name
A	Main switch (water, air, power)
B	Patient chair
C	Foot control
D	Headrest
E	Assistant console
F	Swiveling cuspidor bowl
G	Bowl flushing system
H	Tumbler filler
I	Water unit
J	Operating light
K	Dentist element
L	X-ray viewer

NOTE: The X-ray viewer is intended for illumination and viewing of dental intraoral X-ray films only. Its illuminance range is 1000 lux to 5000 lux, and it is classified as a Type B applied part in compliance with EN 60601-1. Detailed operating instructions are specified in Section 5.4.4.

4. Installation and debugging

Installation and commissioning must be performed by authorized engineers of the manufacturer. Unauthorized installation risks accidents; manufacturer is not liable for losses.

4.1. Product list

Check components after unpacking. Contact manufacturer if missing:

No.	Components name
1	Main dental unit
2	Light arm, Light lamp
3	Operation light, Flushing sputum faucet 、water faucet 、Bowl filter 、Bowl filter cap 、light lame set, Swiveling cuspidor bowl
4	Foot control
5	Chair base
6	Headrest
7	Backrest
8	Seat
9	Doctor chair(Seat 、Gas spring 、gyro wheel 、Gas spring set 、Backrest 、Chair base)
10	3-way syringe 、Strong suction, weak Suction
11	3-way syringe pipe 、Handpiece pipe
12	User manual 、Certificate of quality, Warranty card, Components list, 3-way syringe tips, protection tube 、Inflow switch 、Single-use straw, Socket head wrench, adjustment screw for leveling and screw for the backrest.

4.2. Installation condition

The minimum dimensions (length/width/height) of installation room is 2800 × 2500 × 2500 mm. The floor of installation room must be level and horizontal with deviation ≤3/2000mm. The minimum load-bearing capacity of the floor must be 0.5 N/cm² (equivalent to 510 kg/m²). If the floor cannot meet this load-bearing requirement, structural reinforcement must be carried out before device installation.

Notice: If necessary, please reinforce the surface beneath the floor to meet the load-bearing requirements.

To ensure the normal use of dental units, the technical requirements of input air, water and electric power and environment are as following:

- Input voltage: 230 VAC ±10%, 50/60 Hz, must be connected to a protective earthing circuit in compliance with EN 60601-1, with a maximum earthing resistance of ≤0.1 Ω.
- Input air pressure: 0.55 MPa～0.8 MPa, Minimum air flow: ≥80Nl/min

- Input water pressure: 0.2 MPa～0.4 MPa, Minimum water flow: ≥5L/min

Notice: It would affect the normal use of dental unit if the water pressure is too low or too high.

The quality of incoming water to be supplied to the dental unit should be in compliance with existence of national regulations. The following values are recommendations:

Item	Requirement
Water hardness limit	less than 2.14 mmol/l (<12 °dH)
PH limit	6.5 - 8.5
Maximum particle size	<100μm
Compressed air requirement	Oil-free, filtered with a filter pore size ≤50μm, meets relevant cleanness requirements

Notice : If the compressed air contains too much water, please drain the water inside the compressor in time. If the working environment is humid, it is recommended to add a cooling and drying device to the air compressor.

- Weak suction: Water suction type, which requires connection to the water source and ensures the minimum water level;
- Strong suction: Air suction type, which requires connection to the air source and maintains the minimum air pressure;
- This device is not connected with external negative pressure pump or dental suction machine.

4.3. Installation Preparation

1) Determine the installation place according to the layout, lighting and using habit of the treatment room. The installation place should be clean, dry, shaded and well-ventilated, with flat and solid ground.
2) Choose a spacious place to open the package and make sure the dental unit cannot touch surrounding things during unpacking.
3) Bury the pipes and wires according to the following requirements:
   - The wire outlet is 80 mm above the ground；
   - The water inlet and air inlet use a water pipe with an inner diameter of 36 mm；
   - The inner diameter of the drain pipe is 52 mm, and its outlet is 50 mm above the ground.

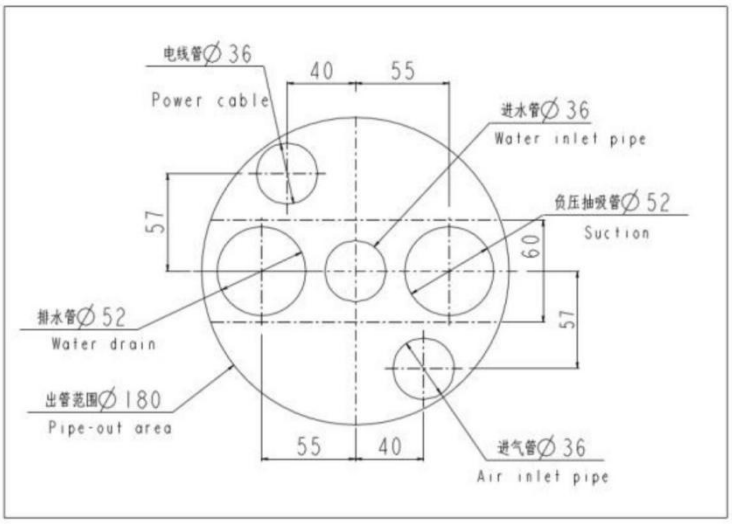

4.4. Installation Steps

- The installation diagram and step are as the following:

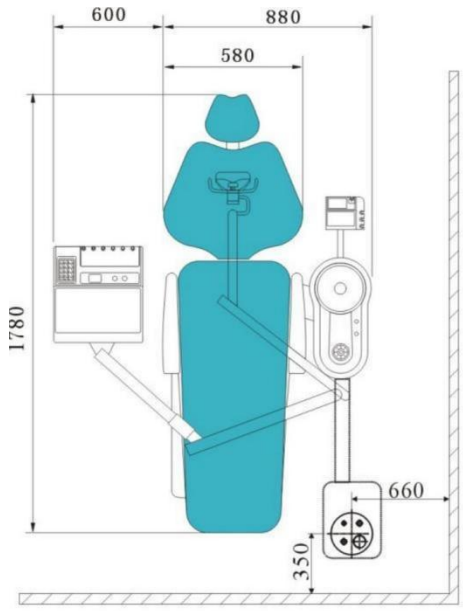

外置式地箱安装示意图
Installation diagram of external floor box

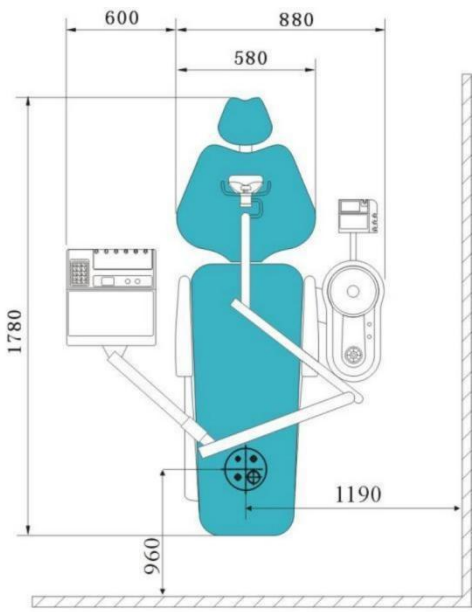

内置式地箱安装示意图
Installation diagram of built-in floor box

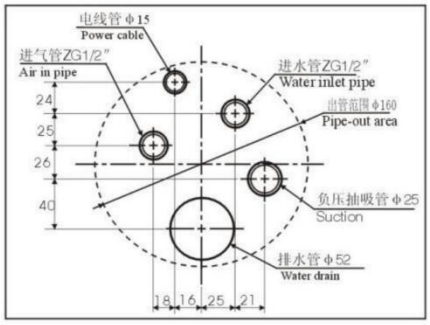

出口平面图

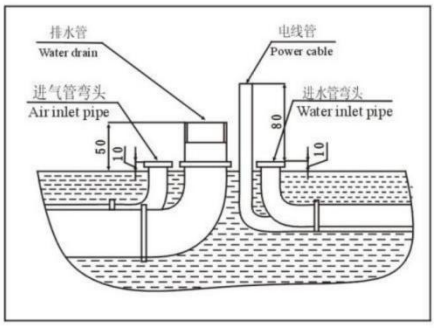

管道出口图

4.4.1. Installation of chair base

Put the unit on the installation place. If the ground of the installation place is not flat, please adjust the chair base with six M12*12 screws. Please keep the chair base in full contact with the ground as much as possible. Then fix the chair base with four M10 expansion screws, to keep the unit stable and reduce the operation noise.

4.4.2. Installation of patient chair

Move the backrest down, insert two round head screws and adjust the patient chair to the appropriate position, then tighten the two screws firmly.

4.4.3. Installation of pipe

Before connecting the pipes, please discharge water and air from the external supply pipeline to remove contaminants, which can extend the service life of the unit. Then insert the drain-pipe of the unit into the drain-pipe of the treatment room, fix the drain-pipe and keep the drainage smooth.

4.5. Debugging

After installation, connect the electric power, air source and water source to the unit. Observe the pressure reading of the air filter relief-pressure valve, if the reading is not 0.6 MPa, adjust the air filter relief-pressure valve to keep the pressure at 0.6 MPa.

The adjustment method of the air filter relief-pressure valve is as follows: pull up the rotary switch on the top of the valve, rotate the rotary switch to adjust the pressure. The pressure increases when rotating clockwise, and decreases when rotating counterclockwise.

5. Operation

5.1. Starting up the dental unit

5.1.1. Initial startup

Before the first start-up of the dental equipment, the disinfection procedure must be strictly followed. For detailed information, please refer to Chapter 6 "Cleaning and Maintenance". The complete disinfection process takes approx. 24 hours.

5.1.2. Main switch

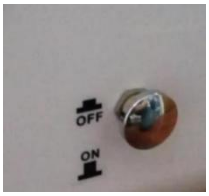 Main Switch	Following switch-on, the dental unit is connected to the power, water and air supply.
⚠CAUTION	
On completing your work, you should switch the dental unit off with the main switch both for safety reasons and to reduce its power consumption. Do not leave the device powered on unattended for a long time.	

5.2. Foot control

The foot control comprises the following main components:

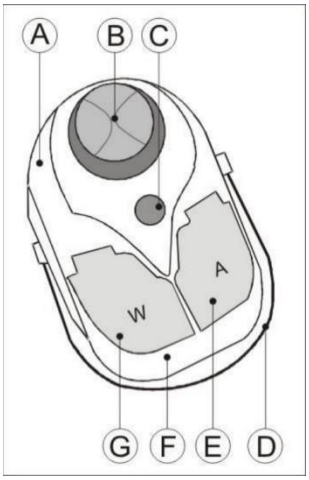	A	Shell
	B	Foot switch. (Control the patient chair movement.)
	C	Chip blower switch
	D	Positioning bar
	E	Air pedal
	F	Base plate
	G	Water pedal

- **Operating Foot switch**

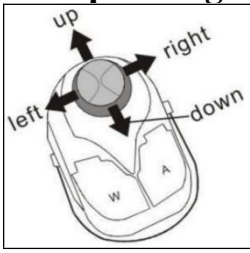	The foot switch is used to control the movement of the patient chair. The upward or downward movement of the seat can be controlled by sliding the foot switch up or down. Similarly, the backward or forward movement of the backrest can be controlled by sliding the foot switch to the left or right.

- **Air pedal and Water pedal**

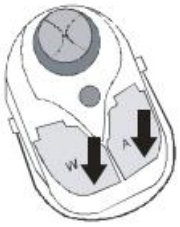	The handpiece is disengaged from its holder on the dental unit. Upon activation of the air pedal, the handpiece motor initiates rotation while chip-clearing air is expelled through the cooling holes. Activating the water pedal dispenses cooling water via the same cooling holes. When both the air and water pedals are activated concurrently, the handpiece motor rotates while emitting a combined spray of cooling air and water.

- **Chip blower switch**

	The handpiece is disengaged from its holder on the dental unit. Depress the button of the chip-clearing air blower switch to release air through the cooling holes of the handpiece.

5.3. Patient chair

The patient chair comprises the following main components:



Mark	Component Name
A	Chair base
B	Seat
C	Headrest
D	Backrest
E	Right armrest
F	Left armrest

5.3.1. Safety instructions

WARNING

a. The free space under the patient seat and up to the water unit can be decreased due to chair movements. Parts of the patient's or user's body may be pinched or crushed. Do not allow any limbs to be caught between the chair upholstery and the chair base. Please make sure that the patient's arms and legs rest on the upholstery of the chair. Do not place any objects on the base of the chair.

b. The maximum load capacity of the patient chair is 150 kg according to EN ISO 7494-1. If the maximum load capacity is exceeded, risks of damage to the patient chair and injury of the patient exists. Do not allow any person who weigh more than 150 kg to sit on the patient chair.

c. There is a risk of crushing or damaging the objects, if they are put into the movement range of the chair. Make sure that not any object such as windows, drawers or other device can protrude into the movement range of the dental unit

d. Chair interlock: As long as a treatment instrument is activated, all functions which can move the patient chair are disabled for safety reasons.

e. General warning: To avoid the risk of electric shock, this equipment must be connected to the supply mains with protective earthing, with a maximum earthing circuit resistance of ≤0.1 Ω. The device should be operated by professional medical staff. Please read the instruction for use carefully before using the device.

f. The device is not classified as AP/APG equipment. It is not suitable for use in the presence of a flammable anaesthetic mixture with air, oxygen or nitrous oxide, or in an oxygen-enriched environment.

g. The device can only be connected with CE certified dental handpieces and accessories specified by the manufacturer.

h. The manufacturer has considered the influence of electromagnetic interference. For normal use, keep the unit far

away from strong electromagnetic field (e.g., mobile phones) that radiates interference signal or electrical fast transient / burst signal.

i. If chair movement is permanently blocked, please contact your service engineer immediately. Do not attempt to disassemble or repair the device by yourself.

5.3.2. Armrest

The patient chair is fitted with armrests on both sides. The left armrest is fixed, while the right armrest can be rotated upward by 180° to facilitate patient entry and exit. For model KLT-6220, please extend the armrest before rotating it.

5.3.3. Adjustable headrest

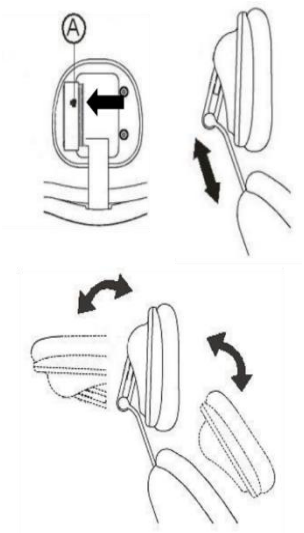

- **Adjustable headrest**

The headrest allows for precise adjustment of the patient's head, optimizing the visibility of difficult-to-access areas within the patient's mouth.

- **Patient Height Adjustment**

The height of the headrest can be adjusted to suit the patient's height by extending or retracting the extension part of the headrest.

- **Adjusting the Jaw Position**

The headrest allows for switching between maxillary and mandibular treatment positions without altering the extension of the headrest.

To adjust, press position A in the direction indicated by the arrow to release the locking mechanism, which will unlock the headrest. While supporting the headrest manually, move it upward or downward to the desired position. Release position A to re-engage the locking mechanism.

WARNING

Before operating, please lock the headrest firmly. A loose headrest will cause injury to the patient.

5.3.4. Moving the patient chair

The movement of the dental chair can be achieved through the control buttons on the dentist's operating console and the assistant's operating console, and it can also be controlled by the foot switch.

Button	Function
Chair Up 	When the "Chair Up" button is pressed, the seat of the dental equipment will move upwards.
Chair Down 	When the "Chair Down" button is pressed, the seat of the dental equipment will move downward.
Backrest Up 	When the "Backrest Up" button is pressed, the backrest of the dental equipment chair will smoothly tilt upwards.
Backrest Down 	When the "Backrest Down" button is pressed, the backrest of the dental equipment chair will smoothly tilt downwards.

5.3.5. Entry/Exit Position

The entry/exit position is designed for simple patient entry and exit. When activated, the patient chair moves to the lowest position and the backrest moves to an upright position.



Entry/exit position can be activated by pressing the "Reset" key.

WARNING

The patient’s feet may become entangled in the instrument hoses of the dental unit when they approach or leave the dental chair, potentially causing them to trip or fall. Please flip the equipment protective screen outward before the patient approaches or leaves the dental chair.

5.3.6. Standard Working Position

When the standard working position is selected, the following functions are enabled:



- The patient chair ascends by approximately 100 mm, while the backrest tilts backward by approximately 50º.
- The standard working position can be activated by pressing the key labeled "LP".

5.3.7. Spitting Position

The following functions are activated when the spitting position is selected:



- The backrest tilts up to the upright position; the cuspidor bowl is flushed for the preset
- The spitting position can be initiated by pressing the corresponding key, and the backrest will return to its previous position upon pressing the key again.

5.3.8. Emergency Stop



- Press the Emergency Stop button in emergency situations to disconnect the power supply of the chair actuator. Turn the Emergency Stop button clockwise and release to release the emergency stop state.
- If continuous movement is needed after the emergency stop is released, turn the switch clockwise fully. The device will start to work again when the switch resets automatically.

CAUTION

Please pay attention to patients and this device when it is occupied, to avoid striking or squeezing the patient. Turn off system power immediately if this device moves accidentally and will not stop moving.

NOTICE

The function that moving the patient chair to the standard working position can be implemented only when the patient chair is stopped at the entry/exit position.

5.4. Dentist element

The dentist console comprises the following main components:



Mark	Component Name
A	Support arm, height-adjustable
B	X-ray viewer
C	Instrument tray
D	Gas-pressure meter
F	Instrument holder
G	3-way syringe
H	High-speed handpiece (not include)
I	Low-speed handpiece (not included)

J	Handle
K	Control panel

5.4.1. Maximum load capacity

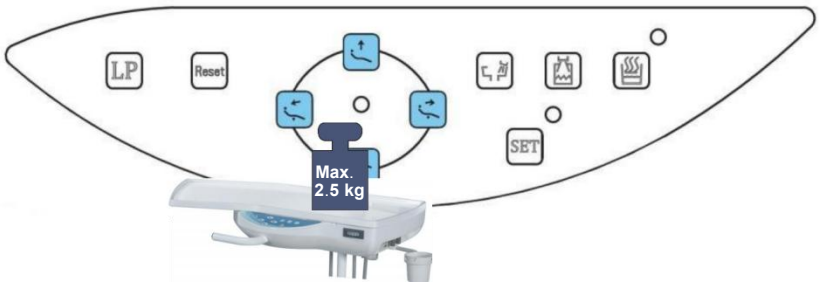

The maximum load of the dentist console instrument tray is 2.5 kg. Overloading is strictly prohibited.

5.4.2. Height adjustment

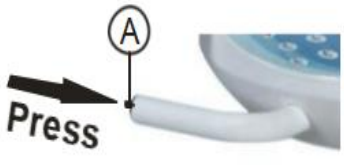

1) Hold the handle and press the locking button (A) with your thumb.
2) Adjust the dentist console to achieve an ergonomic instrument height
3) Loosen the thumb; the button automatically resets. The dentist console is locked at the adjusted height.

5.4.3. Control Panel

KLT-6210 and KLT-6220 are equipped with touch keys. In addition, the control panel of KLT-6220 adds 3 programmable shortcut keys, P1, P2, P3, for easy operation.

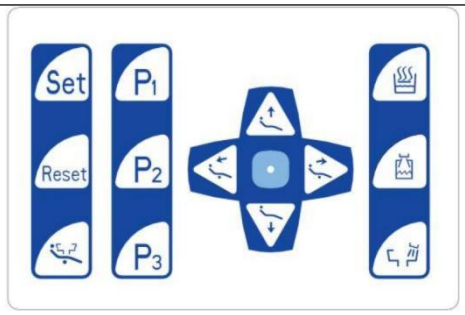

KLT-6210

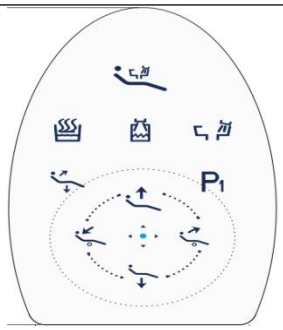

KLT-6220

5.4.3.1. Chair Movement Range

The keys in the chair movement area are used to control the movement of the patient chair. For more details, refer to Section 5.3.4 "Moving the Patient Chair".

5.4.3.2. Water Unit Area

- Tumbler filling

Tumbler  **filling**	Place the water cup under the water outlet. Press the "Tumbler Filling" button. The water cup will be filled according to the preset time. Pressing the button again will immediately stop the filling function.

- **Setting the water Injection Time**

Set 	1) Press and hold the "Set" key for about 2 seconds until the buzzer beeps and the LED light above the button lights up.
Tumbler  **filling**	2) Press the "Tumbler Filling" key until the water level rises to the desired position.
Set 	3) Press the "Set" key again to finish the setting of filling time. The LED above the key lights out.

- **Cuspidor Bowl Flushing**

 ***Flushing***	Press the "Flushing" key. The flushing function is activated for the preset flushing time. Press the key again to stop the flushing function immediately.

- **Setting the flushing time**

Set 	1) Press and hold the "Set" key for about 2 seconds until the buzzer beeps and the LED light above the button lights up. 2) Press the "Flushing" key to set the flushing time according to the following table:

Press Times	**Buzzer Beep**	**LED Flicker**	**Flushing time**
Press Times	Buzzer Call	LED Flicker	Flushing time
One time	One time	One time	**30 seconds**
Twice	Twice	Twice	60 **seconds**
Three times	Three times	Three times	**Continuous flushing (manual stop only)**

3) Press the "Set" key again to complete the configuration of the flushing time. The LED indicator above the key will turn off.

- **Water Heating Function**

Heating 	Press the "Heating" key to activate the heating function. The water temperature in the tumbler can be maintained at 40 °C ± 5 °C. If the LED in the key is illuminated, the heater in the water unit is operational. Press the "Heating" key again to immediately stop the heating function.

5.4.3.3. Programmable Shortcut keys

P1, P2 and P3 are the programmable shortcut keys for seat positions. The setup steps are as follows:

	1) Press and hold the "Settings" key for about 2 seconds until the buzzer sounds and the LED indicator light above the key lights up. 2) Press the chair movement keys to adjust the chair to your desired position. 3) Press P1 to complete the position setting of P1.Press P1 again, and the chair will automatically move to the preset position. 4) P2 and P3 follow the same setting process.

n De

5.4.4. X-ray Viewer

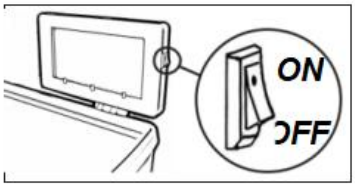	After pressing the start switch, the X-ray viewer will start up and the screen will light up simultaneously. Press the switch again to turn off the X-ray viewer.

5.4.5. Instrument Holder Specification

Each handpiece is equipped with a corresponding magnetic switch on the holder. When the handpiece is removed from its holder, the switch activates the control valve, thereby unlocking the removed handpiece.Therefore, always make sure that all handpieces are placed in the correct instrument holders. If any handpieces are placed in the wrong holders, the removed handpieces will not be activated.

 **CAUTION**
Over-tensioning or pinching the hoses may cause the media pipes to leak. Ensure that you do not pull or bend the instrument hoses excessively during operation.

5.4.6. Handpiece Operating Method

Refer to Section 5.2 "Foot Control". Also observe the operating instructions of the matched handpieces provided by the manufacturer.

5.4.7. Handpiece Working Pressure & Water Flow Adjustment

The working air pressure of the handpiece and the flow rate of the cooling water can be precisely adjusted through their respective regulating valves. The specific positions and functions of the control valves are detailed in the following illustration.

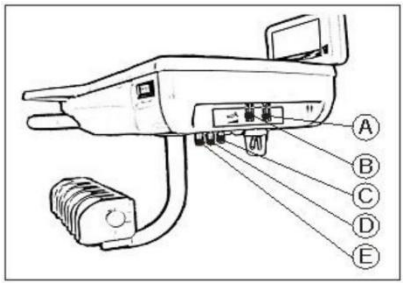

Mark	Component Name
A	Water regulating valve
B	Blowing air regulating valve
C	Working air regulating valve of the handpiece in the fourth holder
D	Working air regulating valve of the handpiece in the third holder
E	Working air regulating valve of the handpiece in the second holder

- **Setting the spray amount**

The spray volume can be set through the water flow control valve:

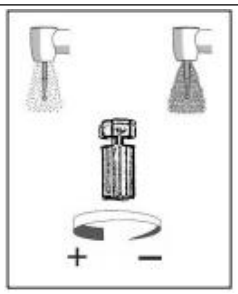

Setting the spray amount:

1) Remove the handpiece from its holder.
2) Step on the air pedal and the water pedal at the same time to activate the spray function.
3) Set spray amount by turning the knob of the water regulating valve.
4) Check the set spray amount and correct the setting if necessary.



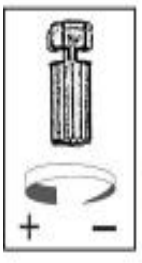





Adjusting the chip blower air

1) Remove the handpiece from its holder.
2) Step on the button of the chip blower switch.
3) Set air flow by turning the knob of the blowing air regulating valve.

Setting the handpiece's working air pressure

1) Remove the handpiece from its holder.
2) Step on the air pedal.
3) Set the working air pressure displayed on the gas-pressure meter by turning the knob of the corresponding regulating valve. (Recommended working pressure: 0.25~0.32MPa for high-speed handpiece; 0.3~0.4MPa for low-speed handpiece)

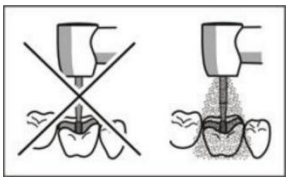

WARNING

Handpieces can be operated without coolant. Tooth substance can be damaged by frictional heat. Always make sure that the treatment area does not overheat whenever you switch the coolant off.

5.4.8. 3-way syringe

- **Removing/attaching the tip**

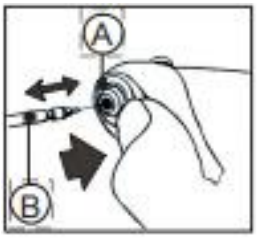

1) Press the ring (A) inward fully.
2) Insert or remove the tip (B).
3) Release the ring to allow it to automatically reset. The tip will be securely locked when attached to the 3-way syringe.

- **Operating the 3-way syringe**

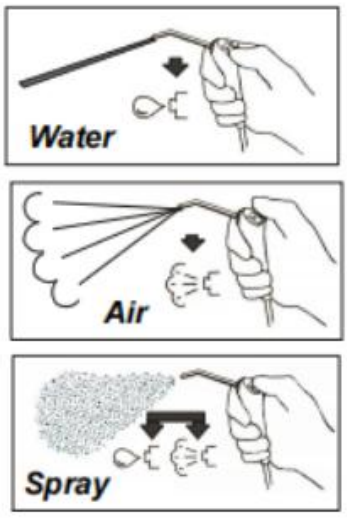	1) Press the water button, and water will flow out of the nozzle. 2) Press the air button, and the airflow will come out from the tip; the 3-way syringe can be used as a chip blower. **3)** Press both the water and air buttons simultaneously, and the nozzle will release a mixed air-water spray.

CAUTION: The 3-way syringe tip is single-use only. Do not reuse, reprocess or resterilize the tip to avoid cross-infection between patients.

5.5. Assistant Console

The assistant console comprises the following main components:

	Mark	Component Name
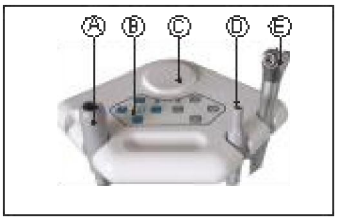	A	Strong suction handle
	B	Control panel
	C	Instrument holder
	D	Weak suction handle
	E	3-way syringe

5.5.1. Mobile assistant stand

The assistant element can be moved in the dental assistant's field of activity, butcannot be adjusted in height. Don't place anything on the assistant element.

CAUTION

The assistant console can be positioned above or below the backrest. The patient could be pinched during chair movements or the chair could be damaged. Move the assistant console out of the collision zone before moving the patient chair.

5.5.2. The control panel on the assistant's shelf

The control panel comprises two areas: chair movement area and water unit area. The key functions are the same as the key functions on the dentist console.

Chair movement area Water unit

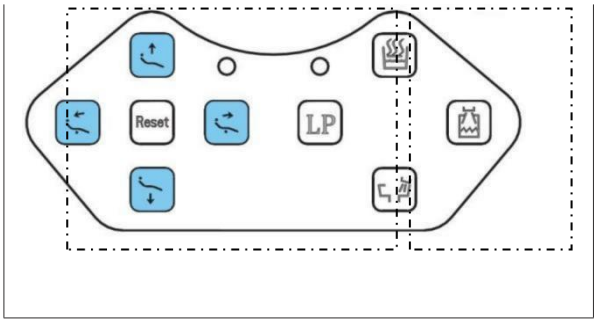

5.5.3. 3-way syringe

Refer to Section 5.4.8 "3-way Syringe".

5.5.4. Suction system

	**1)** The suction system is equipped with a curved tip, which can be securely placed in the corner of the mouth to effectively remove saliva, blood and debris from the oral cavity.
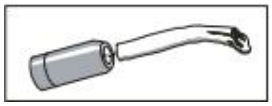	**2)** The suction function is activated when the handle is removed from the holder. The suction filter is located in the water unit (see Section 5.6). The filter can filter particles with a diameter of more than 2 mm. The filter should be washed daily and replaced annually.
	**3)** The suction system is connected to the internal negative pressure module. There is a switch in the strong suction handle to control the opening and closing of the strong suction function.
CAUTION	
The cannula is single-use. Please do not reuse it to avoid cross-infection.	

5.5.5. Spray aspirator

The spray aspirator can be used with its cannula when removed from the holder.

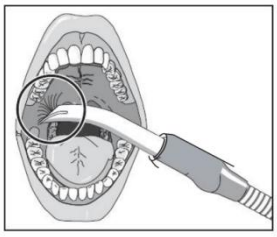	WARNING
	The cannula may attach itself to the oral mucosa due to negative pressure, which may irritate the patient's oral mucosa. Make sure to hold the spray aspirator cannula in such a way that the cannula opening cannot attach itself to the oral mucous membranes by accident.

5.6. Water Treatment Unit

The water unit comprises the following main components:

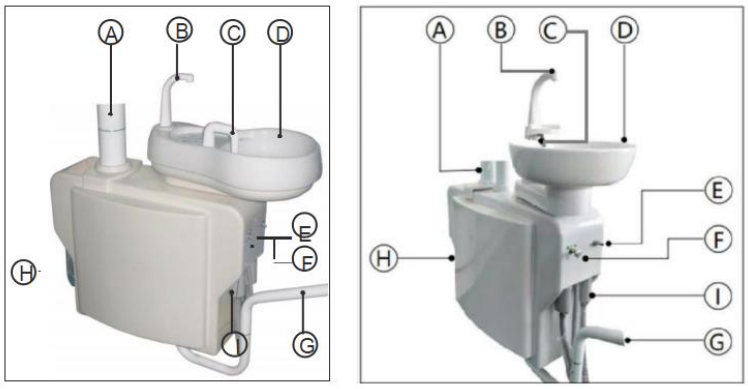

Mark	Component Name
A	Support arm of the dentist element
B	Tumbler filler
C	Bowl Flusher
D	Swiveling cuspidor bowl
E	Air switch
F	Water source switch
G	Support arm of the assistant element
H	Pure water bottle
I	Suction Filter

5.6.1. Tumbler Filler

The operation of filling the water cup can be achieved by pressing the "Tumbler Filling" button on the dentist console or the assistant console.See Section 5.4.3.2 "Water unit area / Tumbler filling".

5.6.2. Cuspidor Bowl Flushing

The flushing of the cuspidor can be initiated through the dedicated "Flushing" key located on either the dentist control panel or the assistant control panel.See Section 5.4.3.2 "Water unit area / Flushing the cuspidor bowl".

5.6.3. Rotatable spittoon

The spittoon inside the water unit can rotate approximately 90 degrees to the left or right for easy patient use.

5.6.4. Air switch

	• Switch the air switch to the "on" position, and air will be injected into the pure water bottle, thereby providing the preset pressure required for the pure water supply of the dental treatment table. • Pull the air switch to the "OFF" position. The air pressure in the pure water bottle is released.

5.6.5. Water Source switch

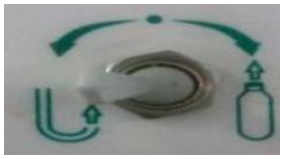	• Turn the water source valve to the "filtered water" position, and the water unit will supply tap water filtered by the built-in filter to the dental treatment chair. • Switch the water source to the "bottled water" position, and the water unit will supply purified water from the pure water bottle to the treatment table.

5.6.6. Pure water bottle

- When the air switch is turned to the "on" position and the water source conversion switch is set to the "bottled water" position, the water in the purified water bottle will be supplied to the dental treatment table for use
- After switching the air switch to the "off" position, you can remove the water bottle and fill it with purified water. The water bottle has a capacity of 1 liter. When performing disinfection operations, you can add disinfectant to the water bottle. Subsequently, the disinfectant will flow through the entire pipeline system, thereby achieving comprehensive disinfection of the internal pipelines of the equipment.

Note: KLT-6210 is equipped with one pure water bottle, and KLT-6220 is equipped with two pure water bottles.

5.7. Operating light

- The operating light is installed on an adjustable-height instrument arm. The height can be adjusted by the handle, and it effectively illuminates the oral treatment area.
- The operating light of KLT-6210 is LED-AZS type. The operator can turn on and off the light according to the symbol indication. The load-bearing of the light arm is 1.2 kg.

- The oral light of KLT-6220 is of the LED-AZS type. After turning on the light, the operator can adjust the brightness steplessly through the sensor within 60 cm-80 cm from the light head. The load-bearing capacity of the lamp arm is 1.5 kg.



KLT-6210&KLT-6220

5.7.1. The installation of operating light

Connect the operating lights and the wires of the dental equipment according to the color of the wires, making sure that wires of the same color are connected to each other. Then, install the operating lights inside the lamp holder and secure them with screws.

5.7.2. Operation of operating light

1) Turn on the main power of the device, and the operating light enters the standby state.
2) For KLT-6210: Press the touch switch on the light head to turn on/off the light.
3) For KLT-6220: Wave your hand within 60 cm-80 cm below the light head to turn on/off the light; stay in the sensing area to adjust the brightness steplessly.
4) Adjust the light arm to aim the light at the oral treatment area.

5.7.3. Cleaning the Operating Light Handle

After each patient, clean the operating light handle as follows:

1) Use a clean, soft cloth moistened with a **1:100 diluted medical multi-enzyme detergent** (e.g., Lionser® Medical Low-Foaming Multi-Enzyme Detergent).
2) Wipe the entire handle surface and keep it visibly wet for at least **10 minutes.**
3) Wipe off all residues with a cloth moistened with sterile or distilled water.
4) Allow the handle to air dry completely before next use.

- Do not spray liquids directly onto the handle or light head.
- Do not use undiluted detergent, abrasives, or solvents.

NOTICE
Also observe the operating instructions of the operating light provided by the manufacturer.

6. Cleaning & Maintenance

To maintain the safety and effective operation of dental equipment, it must be maintained, cleaned and disinfected by the medical team in strict accordance with the specifications in this manual; this can

minimize the risk of contamination to patients and users, while ensuring that the equipment is in the best operating condition.

6.1. 3-way syringe Reprocessing Requirements

In accordance with GSPR 11.7 of the MDR, the 3-way syringe must be cleaned, disinfected and sterilized prior to each use on a new patient. The reprocessing steps are as follows:

6.1.1. Clean

1) disassembly

Before cleaning the 3-way syringe, remove the syringe tip from the 3-way syringe handle and disconnect the handle from the hose.

2) Per-Rinse

Rinse the syringe tip and handle with potable water using a brush to remove organic residues, then rinse with a neutral multi-enzyme detergent.

3) soaking

Place the rinsed syringe tip and syringe handle on the medical tray; pour the CIDEZYME® XTRA Multi-enzyme detergent to completely immerse the 3-way syringe tip and handle for 10 minutes; clean the surface of the syringe tip and handle with a soft brush; and finally rinse the inner cavity of the syringe tip and handle thoroughly.

4) Rinse and dry

Rinse with pure water or distilled water for at least 10 minutes to remove any residual detergent. Subsequently, wipe the surface of the 3-way syringe nozzle and handle using a clean cotton cloth. Finally, use an air gun to blow dry the nozzle and handle for 30 seconds until no excess liquid residue remains.

6.1.2. Sterilization

Once the three-way syringe tip and handle are fully cleaned and dried, place them into a self-sealing, sterilized medical paper-plastic bag. The assembly is then subjected to sterilization in a standard medical pulsating vacuum steam sterilizer.

The sterilization parameters are as follows:

- Sterilization temperature :134 ℃
- Sterilization time： 5 minutes
- Drying time : 30 minutes.

The sterilization process has been verified using biological and chemical indicators, with a sterility assurance level (SAL) of 10^{-6}, in compliance with the requirements of EN ISO 14937:2000.

6.1.3. Maximum Number of Reprocessing Cycles

The maximum number of reprocessing cycles for the 3-way syringe (including tip and handle) is 250. The 3-way syringe must be replaced once the maximum number of cycles is reached.

6.2. Waterline Disinfection & Biofilm Control

To prevent the presence of microorganisms in the tubing from causing infection to patients, the waterline of the Dental unit is disinfected as follows：:

6.2.1. Preprocessing (After Each Patient)

6.2.1.1.Residual Liquid Drainage

Immediately after treatment of each patient, activate the foot switch to run water/air through the 3-way syringe (air, water, spray) and handpiece tubing for a minimum of 30 seconds to flush residual saliva, blood and other contaminants from the tubing.

Note: Avoid contaminants remaining in the tubing to breed bacteria.

6.2.1.2.Disassemble Replaceable Parts

Remove the detachable parts such as the mobile phone and the three-way syringe nozzle for separate cleaning and disinfection (clean/disinfect and sterilize the mobile phone in accordance with the requirements of the corresponding manufacturer, and clean and sterilize the three-way syringe nozzle as required in Section 6.1).

6.2.2. Daily Pipeline Disinfection (Core Step)

Specialized dental pipeline disinfectants (such as chlorine-containing preparations, peroxides, acidic electrolyzed oxidizing water, etc.) should be used. Strongly corrosive disinfectants should be avoided.

Specific operation steps:

6.2.2.1. Prepare disinfectant:

Prepare 500 to 1000 mL of 3% hydrogen peroxide disinfectant solution

6.2.2.2. Cyclic Disinfection

- Inject the disinfectant into the water tank of the treatment machine.
- Operate the water supply button for the dental turbine handpiece and the spittoon flushing button on the instrument panel, and observe whether the disinfectant flows out from the nozzle of the dental turbine handpiece and the flushing nozzle above the spittoon. Keep it open for 30 seconds to 1 minute (to ensure that the original water in the pipeline is completely replaced by the disinfectant).
- After filling the disinfectant solution, conduct a 5 - minute flushing to ensure that all pipelines contain the disinfectant. Then let it stand for 30 minutes. The disinfection frequency is once a day. (covering all waterways such as the handpiece pipeline, three-in-one gun pipeline, and sputum basin flushing pipeline, etc.)
- Key: Ensure that the disinfectant reaches the end of all pipelines (for example, the disinfectant should flow out at the handpiece interface)

6.2.3. Rinsing and Drying

6.2.3.1.Clear Water Rinse

After disinfection is completed, replace the water storage tank with sterile water (or distilled water), and recirculate and rinse the pipeline for 5 to 10 minutes to thoroughly remove the residual disinfectant (to avoid irritating the patient's mouth).

6.2.3.2. Drying Pipeline

Finally, step on the foot switch to drain the water inside the pipeline, or use compressed air to dry the pipeline (to reduce the breeding of details in a humid environment).

6.2.4. Regular Deep Maintenance (Weekly/Monthly)

Monthly pipeline inspection: Use an ATP bioluminescence detector or microbial culture to verify the disinfection effect (standard: the number of bacteria colonies in the water at the end of the pipeline ≤ 200 CFU/mL).

IMPORTANT
Care and cleaning intervals: The time intervals specified for disinfection, care and cleaning are the minimum mandatory requirements. Please adapt the time intervals to suit your actual clinical working frequency and the national requirements of the country of use. Medicaments and disinfectants chemically react with the surface of the unit. Due to their high concentrations and the substances they contain, many medicaments can dissolve, etch, bleach or discolor surfaces. Clean any medicament residues off of the unit immediately with a moist cloth!
NOTICE
Liquids can enter the unit during cleaning or disinfection, which may destroy the electrical components of the dental unit. Do not spray any liquids into the unit. To clean near openings, first spray the liquid onto a cleaning cloth. Then wipe over the unit with the cleaning cloth. Disinfectants can dissolve dyes in cleaning clothes, which may discolor the outer surface of the unit. Do not clean or disinfect the unit with colored cleaning clothes.

6.3. Dental Unit Surface Cleaning & Disinfection

In order to prevent contaminants present on the surface of the dental chair from causing infection to patients, the surface of the Dental unit must be cleaned and disinfected in accordance with the following method:

Intervals	Cleaning Items	Operational Approach	Approved Cleaning Agents
After each patient	Cleaning the upholstery surface	1.Wipe the surface of the upholstery with a clean cotton cloth saturated with the approved cleaning agent, then keep the surface wet with the agent for a minimum contact time of 10 minutes to ensure effective decontamination. 2.Then thoroughly wipe the surface of the upholstery with a clean cotton cloth saturated with sterile water or distilled water to completely remove all cleaning agent residues, with no visible foam or streaks remaining. 3. Disinfect the surface with a medical surface disinfectant after cleaning.	CIDEZYME® XTRA Multi-enzyme detergent; Medical surface disinfectant compliant with EN 14476
After each patient	Cleaning the control panels surface	1..Wipe the surface of the control panels with a clean cotton cloth saturated with the approved cleaning agent, then keep the surface wet with the agent for a minimum contact time of 10 minutes to ensure effective decontamination. 2.Then wipe the surface of the control panels with a clean cotton cloth dipped in pure water or distilled water for at least 10 minutes to ensure that no cleaning agent residue remains.	CIDEZYME® XTRA Multi-enzyme detergent; 75% medical alcohol

Intervals	Cleaning Items	Operational Approach	Approved Cleaning Agents
		3. Wipe and disinfect with 75% medical alcohol after cleaning.	
After each patient	Cleaning suction handle surface	1.Wipe the surface of the suction handle with a clean cotton cloth saturated with the approved cleaning agent, then keep the surface wet with the agent for a minimum contact time of 10 minutes to ensure effective decontamination.. 2.Then wipe the surface of the suction handle with a clean cotton cloth dipped in pure water or distilled water for at least 10 minutes to ensure that no cleaning agent residue remains. 3. Disinfect with medical surface disinfectant after cleaning.	CIDEZYME® XTRA Multi-enzyme detergent; Medical surface disinfectant compliant with EN 14476
After each patient	Cleaning the cuspidor bowl surface	1.Wipe the surface of the cuspidor bowl with a clean cotton cloth saturated with the approved cleaning agent, then keep the surface wet with the agent for a minimum contact time of 10 minutes to ensure effective decontamination 2.Then wipe the surface of the cuspidor bowl with a clean cotton cloth dipped in pure water or distilled water for at least 10 minutes to ensure that no cleaning agent residue remains. 3. Activate the cuspidor flushing for at least 30 seconds after cleaning.	CIDEZYME® XTRA Multi-enzyme detergent
Daily	Cleaning the instrument tray	1.Wipe the surface of the tray with a clean cotton cloth saturated with the approved cleaning agent, then keep the surface wet with the agent for a minimum contact time of 10 minutes to ensure effective decontamination. 2.Then wipe the surface of the tray with a clean cotton cloth dipped in pure water or distilled water for at least 10 minutes to ensure that no cleaning agent residue remains. 3. Disinfect after cleaning.	CIDEZYME® XTRA Multi-enzyme detergent
Weekly	Cleaning of Waterlines surface	1. Wipe the surface of the waterlines with a clean cotton cloth dipped in cleaning agent keep the surface wet with the agent for a minimum contact time of 10 minutes to ensure effective decontamination. 2. Then wipe the surface of the waterlines with a clean cotton cloth dipped in pure water or distilled water for at least 10 minutes to ensure that no cleaning agent residue remains.	CIDEZYME® XTRA Multi-enzyme detergent
Weekly	Cleaning the foot control surface	1.Wipe the surface of the foot control with a clean cotton cloth dipped in cleaning agent keep the surface wet with the agent for a minimum contact time of 10 minutes to ensure effective decontamination. 2. Then wipe the surface of the foot control with a clean cotton cloth dipped in pure water or distilled water for at least 10 minutes to ensure that no cleaning agent residue remains.3. Check the waterproof performance of the foot control weekly.	CIDEZYME® XTRA Multi-enzyme detergent
Weekly	Cleaning the filter of the suction device	1.Open the filter flask and take out the filter. 2.Rinse with daily potable water and a brush to remove organic residues from the filter, then rinse with detergent. 3.Soak the rinsed filter in detergent for 10 minutes; clean the filter surface with a brush. 4.Rinse with pure water or distilled water for at least 10 minutes to remove residual detergent. 5. Wipe the surface of the filter with a clean cotton cloth, and dry it before reinstalling.	CIDEZYME® XTRA Multi-enzyme detergent

Intervals	Cleaning Items	Operational Approach	Approved Cleaning Agents
Monthly	Cleaning the water and air filters surface	1.Turn off the water and air source, open the water/air filter housing and take out the filter element. 2.Wipe the surface of the filter element with a clean cotton cloth dipped in cleaning agent keep the surface wet with the agent for a minimum contact time of 10 minutes to ensure effective decontamination. 3. Then rinse the filter element with pure water or distilled water for at least 10 minutes to ensure that no cleaning agent residue remains. 4. Dry the filter element completely before reinstalling. Replace the filter element every 3 months.	CIDEZYME® XTRA Multi-enzyme detergent

7. Maintenance by the service engineer

7.1. Inspection & Maintenance Items

To ensure the safe and reliable operation of your dental equipment and prevent damage from natural wear and tear, the equipment must be inspected and maintained annually by an authorized service engineer. The service engineer will also record a summary of the inspection and maintenance work in the "Warranty Card".

The annual maintenance must include the following items:

a. Full device electrical safety inspection, including earthing continuity, insulation resistance and leakage current, in accordance with EN 60601-1.
b. Inspection and maintenance of the patient chair drive system, including motor, transmission mechanism, limit switch, etc.
c. Inspection of the water and air pipeline system, including pipeline sealing, valve switch performance, pressure regulator calibration, etc.
d. Inspection and calibration of the suction system performance, to ensure that the suction parameters meet the design requirements.
e. Inspection of the operating light, control panel, foot switch and other electrical components.
f. Replacement of wearing parts, including seals, filters, O-rings, etc.
g. Functional verification of the whole device, to ensure that all functions meet the design specifications.

7.2. Safety checks

Medical equipment is designed in such a way that the first occurrence of a fault does not create a hazard to the safety of patients, users or other persons. It is therefore important to detect such faults before a second fault occurs, which might then lead to safety hazards.

For that reason, it is essential to perform a full safety test every 2 years in accordance with EN 60601-1 standard, which aims particularly at detecting electrical faults (e.g. isolation defects). This test must be done by an authorized service engineer with relevant qualifications.

WARNING

The dental unit must not be operated if it has failed to pass the safety tests!

8. Troubleshooting

Some common faults and troubleshooting methods are shown in the following table:

Fault	Reason Analysis	Corrective Action
Handpiece Water Leakage	1.The membrane of the diaphragm valve e has been damaged 2. The water valve controlled by air has been damaged	1. Replace with a new membrane 2. Replace with a new water valve
Dripping 3-way syringe	The O-ring or the spring of the water/air button has been damaged	Replace with a new O-ring or spring.
The tumbler fillercannot be shut off.	Core of the solenoid valve has been jammed by debris	Remove and clean the valve core, remove the debris.
The flushercannot be shut off.	Core of the solenoid valve has been jammed by debris	Remove and clean the valve core, remove the debris.
The tumbler fillercannot open.	1.The solenoid valve has been damaged 2. The circuit board in the water unit has been damaged	1. Replace with a new solenoid valve 2. Replace with a new circuit board
The flushercannot open.	1.The solenoid valve has been damaged 2. The circuit board in the water unit has been damaged	1. Replace with a new solenoid valve 2. Replace with a new circuit board
The heatercannot work	1. The heater has been damaged2. The circuit board in the water unit has been damaged	1. Replace with a new heater r2. Replace with a new circuit board
The saliva ejector has insufficient suction	1.Water/air pressure is not enough 2. The filter has been blocked by dirt3. The pipeline is leaking	1. Adjust the water/air pressure to the specified range, add supercharging equipment if necessary 2. Open and clean the filter thoroughly 3. Check the pipeline and repair the leakage point
The spray aspirator has insufficient suction	1.Air pressure is not enough 2. The filter has been blocked by dirt3. The pipeline is leaking	1. Increase air pressure by adjusting the reducing valve to the specified range 2. Open and clean the filter thoroughly 3. Check the pipeline and repair the leakage point
The patient chair is malfunctioning	1.The motor has been damaged 2.The circuit board controlling the chair motors has been damaged 3.Fuse on the circuit board has been damaged 4. The emergency stop button is triggered	1. Replace with a new motor 2. Replace with a new circuit board 3. Find out the cause and replace with a new fuse 4. Release the emergency stop button
Operating lightcannot open	1.The circuit board in the operating light has been damaged 2.Fuse of the operating light has been damaged 3. The power cable is loose	1. Replace with a new circuit board 2. Find out the cause and replace with a new fuse 3. Reconnect the power cable firmly
EMC interference, device function	1.External RF equipment is too close to the device	1. Keep the RF equipment at least 30cm away from the device

Fault	Reason Analysis	Corrective Action
abnormal	2. The device grounding is poor	2. Check the grounding wire and ensure the grounding is reliable

If the fault cannot be eliminated through the above methods, please contact the ROSON authorized service engineer immediately. Do not disassemble or repair the device without authorization, otherwise the warranty will be invalidated.

9. Disposal

The dental unit is medical electrical equipment and also belongs to electronic and electrical equipment. This product must not be disposed of as unsorted municipal waste, and must be treated separately for collection and recycling in accordance with the applicable WEEE regulations in the country of use. Please contact your local dental equipment specialist for country-specific information on disposal.

CAUTION

- Prior to disassembly / disposal of the product, it must be fully cleaned, disinfected and sterilized to avoid biological contamination risks.
- No mercury separator is installed within the product; therefore, its drainage system cannot filter amalgam alloy. In order to avoid pollution to the drainage system and the environment, the user shall install a dedicated dental mercury separator additionally before using the device for amalgam-related operations.

10. Overview of graphic symbols

symbols	Definition	symbols	Definition
I 	Switch on		Temperature limit
O 	Switch off		Atmospheric pressure limitation
	Chair up	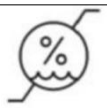	Humidity limitation
	Chair down		electrical and electronic equipment
	Backrest up		Stacked layers must not be more than 2 layers
	Backrest down		Caution, consult accompanying documents
	Spittoon position		Type B applied parts
	General working position	IPX4	The foot-operated can be protected against splashing water.
	Emergency stop		Caution, hot surface

	Cup filling		Manufacturer
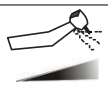	Cooling water adjustment		Date of manufacture
	Filtered water		Keep dry
	Bottle water		Transport upright with the arrow pointing upwards
	Protective grounding	EU REP	EU Authorized Representative
	Flushing (the cuspidor)		Warning, caution
	Heating	CE 0598	CE mark A product with this mark meets the requirements of the applicable EU directive.
	Set (filling/flushing) time		Refer to the user manual
Fuse	Ø5X20 F6.3AH 250VAC	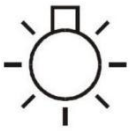	The operating light is lighting
	The operating light is Low- intensity lighting		
	The operating light is indirect lighting		

10.1. Water/Air Inlet & Control Panel Marking

1) Water/Air Inlet Marking

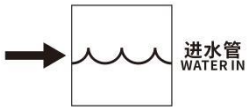	Device water inlet is marked with: WATER IN
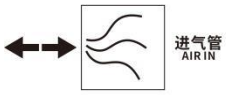	Device air inlet is marked with: AIR IN
All inlet markings are made by corrosion-resistant and wear-resistant laser engraving process, with clear marks that are not easy to fall off, complying with EN 60601-1 standard requirements.	

2) Control Panel Marking

All keys and functional areas of the control panel are marked with corresponding English names and graphic symbols specified in Chapter 10 of this manual. The titles and functional keys are clearly divided with clear hierarchy.

11. Electrical schematic diagrams

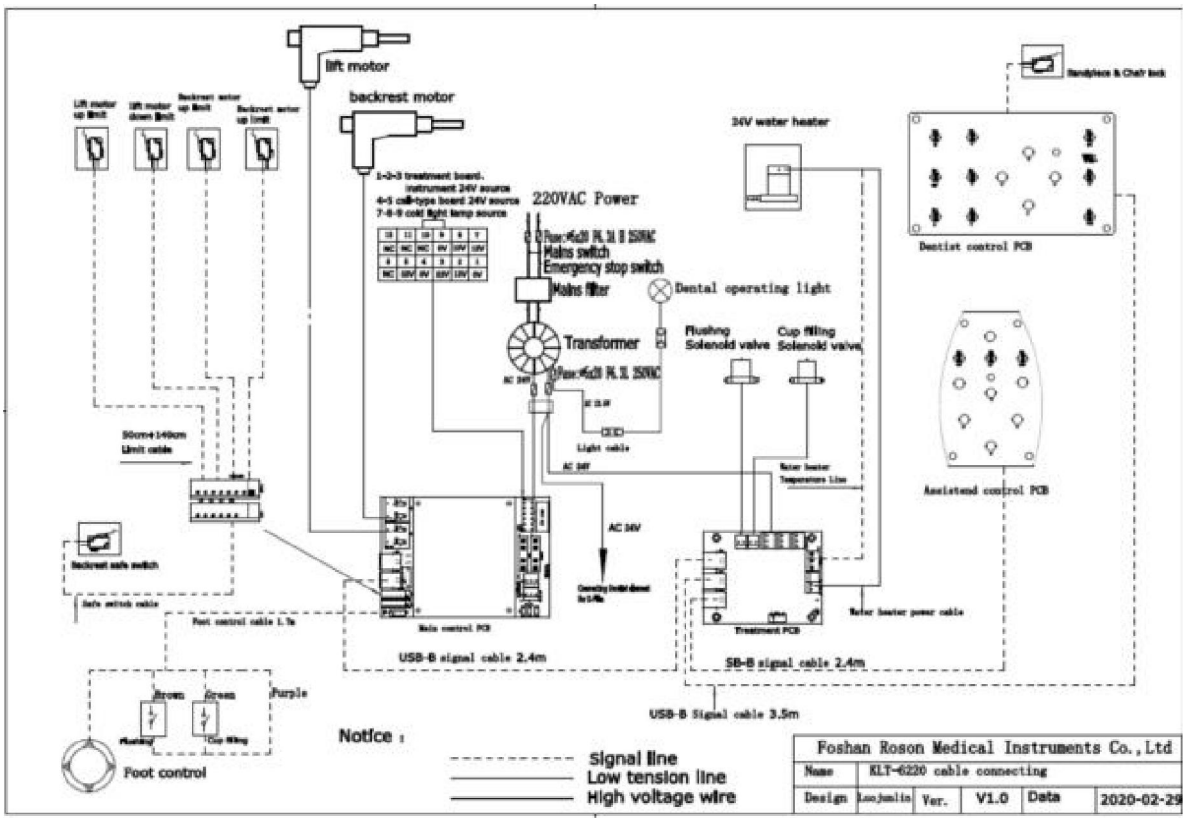

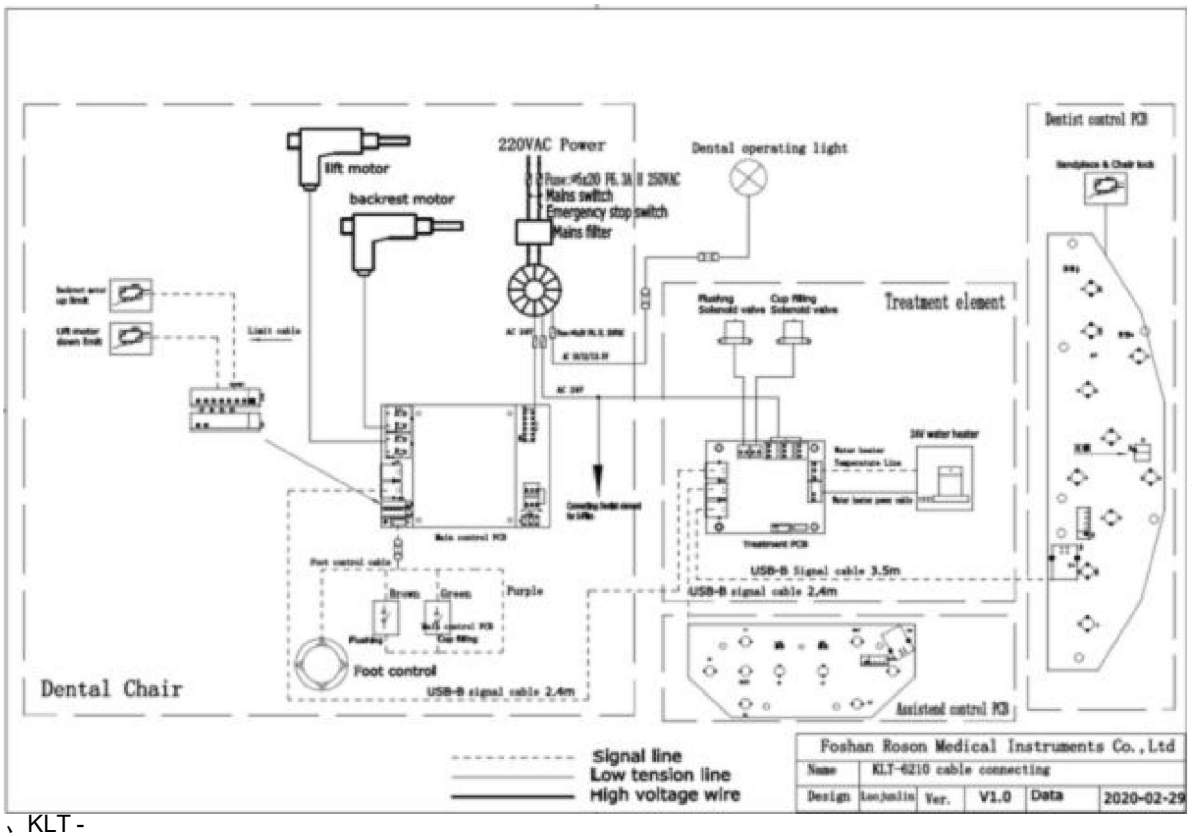

210

、KLT -

12. Water-air layouts diagrams

KLT-6210 水气原理图
KLT-6210 water-air layout

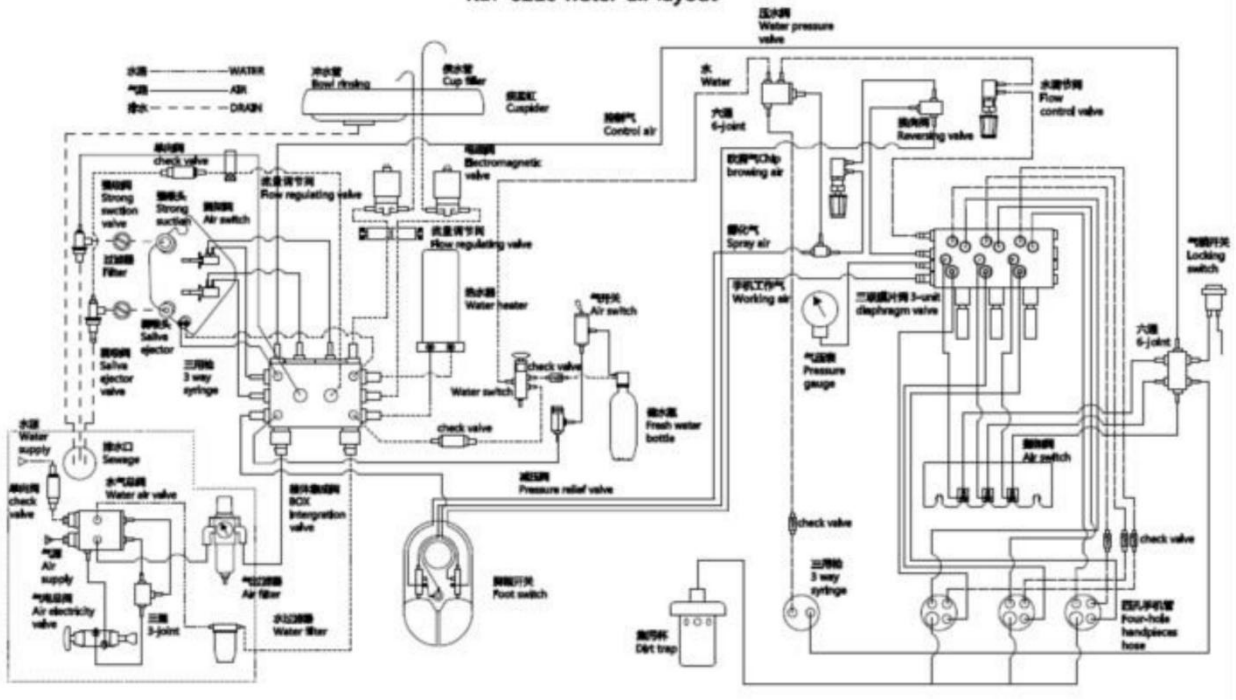

KLT-6220 水气原理图
KLT-6220 water-air layout

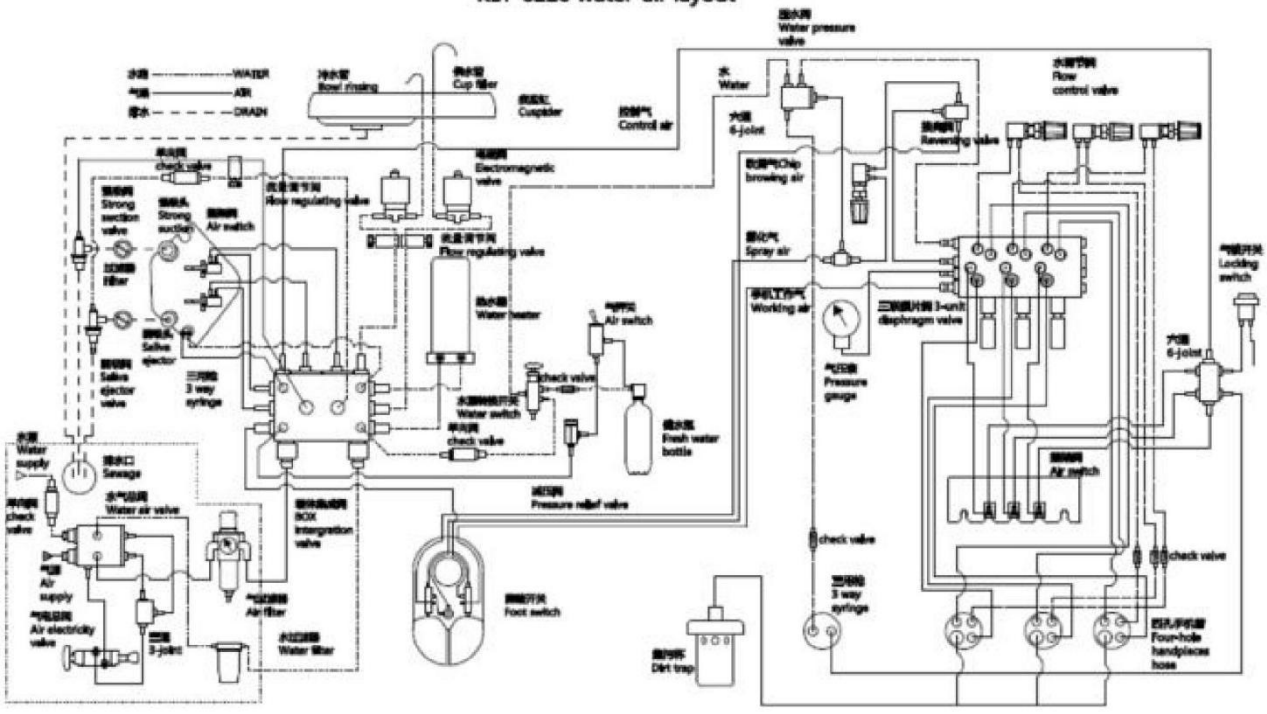

13. EMC Guidance

Warning: Don't use near active HF surgical equipment and the RF shielded room of an ME system for magnetic resonance imaging, where the intensity of EM disturbances is high.

Warning: Use of this equipment adjacent to or stacked with other equipment should be avoided because it could result in improper operation. If such use is necessary, this equipment and the other equipment should be observed to verify that they are operating normally.

Warning: Use of accessories, transducers, and cables other than those specified or provided by the manufacturer of this equipment could result in increased electromagnetic emissions or decreased electromagnetic immunity of this equipment and result in improper operation

Warning: Portable and mobile RF communications equipment (including peripherals such as antenna cables and external antennas) must be used no closer than 30 cm to any part of the device, including all cables, accessories and components specified by the manufacturer. Otherwise, degradation of the device's basic safety and essential performance may occur.

Technical description

1) This manual provides all necessary instructions for maintaining BASIC SAFETY and ESSENTIAL PERFORMANCE with regard to electromagnetic disturbances for the expected service life.

2) The following content provides guidance and manufacturer's declaration on electromagnetic emissions and immunity.

Guidance and Manufacturer's Declaration – Electromagnetic Emissions

This device is intended for use in the electromagnetic environment specified below. The customer or the user of this device should ensure that it is used in such an environment.

Emissions Test	Compliance	Electromagnetic Environment Guidance
RF emissions CISPR 11	Group 1	This device uses RF energy only for its internal function. Therefore, its RF emissions are very low and are not likely to cause any interference in nearby electronic equipment.
RF emissions CISPR 11	Class B	This device is suitable for use in all establishments, including domestic establishments and those directly connected to the public low-voltage power supply network that supplies buildings used for domestic purposes.
Harmonic emissions IEC 61000-3-2	Class A	
Voltage fluctuations/ flicker emissions IEC 61000-3-3	Complies	

Guidance and Manufacturer's Declaration – Electromagnetic Immunity

This device is intended for use in the electromagnetic environment specified below. The customer or the user of this device should ensure that it is used in such an environment.

Immunity Test	IEC 60601 Test Level	Compliance Level	Electromagnetic Environment Guidance
Electrostatic discharge (ESD) IEC 61000-4-2	±8 kV contact±2 kV, ±4kV, ±8 kV, ±15 kV air	±8 kV contact±2 kV, ±4kV, ±8 kV, ±15 kV air	Floors should be wood, concrete or ceramic tile. If floors are covered with synthetic material, the relative humidity should be at least 30%.
Electrical fast transient/burst IEC 61000-4-4	±2 kV for power supply lines±1 kV for input/output lines	±2 kV for power supply lines±1 kV for input/output lines	Mains power quality should be that of a typical commercial or hospital environment.
Surge IEC 61000-4-5	± 1 kV line(s) to line(s)± 2 kV line(s) to earth	± 1 kV line(s) to line(s)± 2 kV line(s) to earth	Mains power quality should be that of a typical commercial or hospital environment.
Voltage dips, short interruptions and voltage variations on power supply input lines IEC 61000-4-11	0 % UT; 0.5 cycle at 0°,45°,90°, 135°, 180°, 225°, 270°, 315°0 % UT ; 1 cycle70 % UT; 25/30 cycle0% UT; 250/300 cycle	0 % UT; 0.5 cycle at 0°,45°,90°, 135°, 180°, 225°, 270°, 315°0 % UT ; 1 cycle70 % UT; 25/30 cycle0% UT; 250/300 cycle	Mains power quality should be that of a typical commercial or hospital environment. If the user of this device requires continued operation during power mains interruptions, it is recommended that this device be powered from an uninterruptible power supply or a battery.
Power frequency magnetic field IEC 61000-4-8	30 A/m, 50Hz/60Hz	30 A/m, 50Hz/60Hz	Power frequency magnetic fields should be at levels characteristic of a typical location in a typical commercial or hospital environment.
Conducted RF IEC 61000-4-6	3 V r.m.s. 150 kHz to 80 MHz6 V RMS in the ISM and amateur bands between 0.15 MHz and 80 MHz	3 V r.m.s. 150 kHz to 80 MHz6 V RMS in the ISM and amateur bands between 0.15 MHz and 80 MHz	Portable and mobile RF communications equipment should be used no closer to any part of this device, including cables, than the recommended separation distance calculated from the equation applicable to the frequency of the transmitter.
Radiated RF IEC 61000-4-3	10 V/m 80 MHz – 2,7 GHz80 % AM at 1 kHz	10 V/m 80 MHz – 2,7 GHz80 % AM at 1 kHz	Portable and mobile RF communications equipment should be used no closer to any part of this device, including cables, than the recommended separation distance calculated from the equation applicable to the frequency of the transmitter.

NOTE: UT is the a.c. mains voltage prior to application of the test level.

Recommended Separation Distances

Portable and mobile RF communications equipment should be separated from this device by a minimum distance according to the maximum output power of the communications equipment and the transmission frequency.

Maximum Output Power of Transmitter (W)	Separation Distance According to Frequency (m)
	80 MHz to 800 MHz: d = [1.2]√P 800 MHz to 2.7 GHz: d = [2.3]√P
0.01	0.12
0.1	0.38
1	1.2
10	3.8
100	12

NOTE: At 80 MHz and 800 MHz, the separation distance for the higher frequency range applies.

NOTE: These guidelines may not apply in all situations. Electromagnetic propagation is affected by absorption and reflection from structures, objects and people.

14. Accessory

Name	Model/specification	Material Code	Quantity
Fuse	5C 6.3A H250VAC	23.001.000004	2
3-way syringe	RV022/size: 117*20*30mm	01.011.301101	2
Strong suction tube	D12*9mm L1.5M	11.003.030003	1
Weak suction tube	D10*6.5mm L1.5M	11.003.050002	1

15. Serious Incident Reporting

In accordance with EU MDR Regulation (EU) 2017/745 and the relevant regulations of the country of use, the user must immediately report any serious incident related to this device to the manufacturer and the local competent authority.

Contact information of the manufacturer:

Phone: +86-757-86407037

E-mail: sales001@fsroson.com

16. E-labelling Declaration

This device does not use electronic labelling (e-labelling). All manufacturer-supplied information, including the user manual, technical documentation and labelling information, is provided in printed form with the device. The manufacturer does not provide device information via a website or other electronic formats as the primary information source.